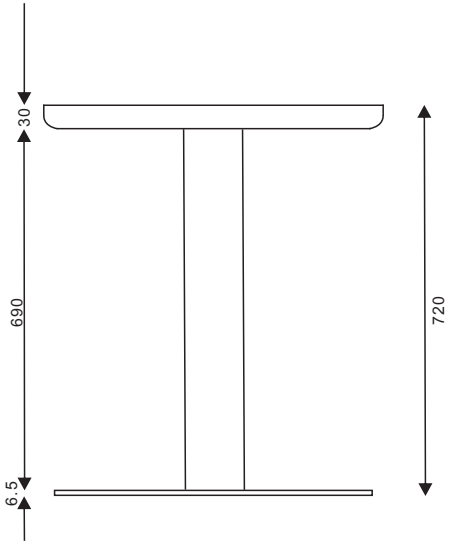

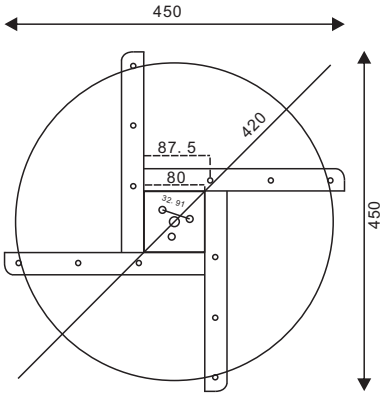

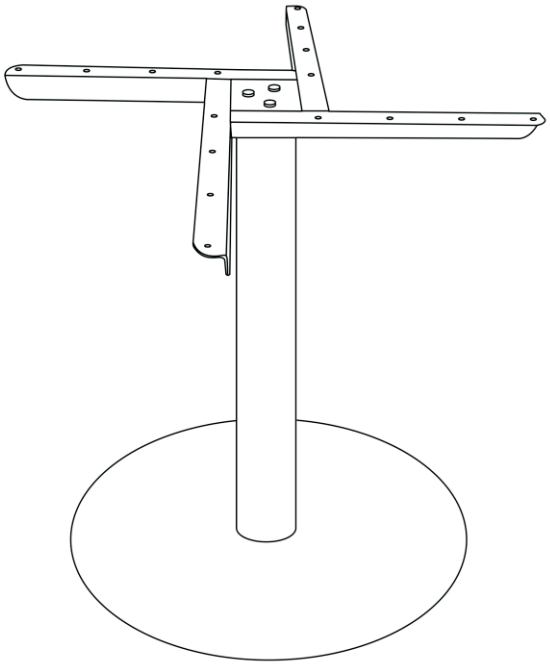

Model: RTB6
Size:W450xD450x720mm